Remote Sensing and Multivariate Analysis for the Characterization of a Vineyard Area

Mihai HERBEI[1], Cosmin Alin POPESCU[1], Alin DOBREI[1], Radu BERTICI[1], Florin SALA[1,2,*]
[1]University of Life Sciences "King Mihai I" from Timisoara, Timisoara, Calea Aradului, 300645, Romania
[2]Agricultural Research and Development Station Lovrin, Lovrin, 307250, Romania
[*]Corresponding author: florin_sala@usvt.ro

Abstract. *The Recas wine-growing area, Romania, was analyzed and characterized through remote sensing and multivariate analysis. ASPECT, SLOPE and DEM were the parameters determined for the morphological characterization of the surface in the considered area. The parameter values were classified into nine classes characterizing the vineyard area (VLC1 to VLC9). For the vineyard areas ASPECT is a very important parameter. Classes VLC4, VLC5, VLC6 (S-E, S, and S-V) recorded 713.94 ha, which represented 58.85% of the total ASPECT parameter. To these classes can be added the VLC3 (10.10%) and VLC7 (15.59%) classes. In the case of the SLOPE parameter, values between 13.19 ha (VLC9) and 238.31 ha (VLC3) were recorded. In the case of the DEM parameter, values between 51.67 ha (VLC9) and 191.52 ha (VLC6) were recorded. Based on multivariate analysis, the principal components explained 95.983% of the total variance, and the VLC were distributed within the PCA diagram correlated with territorial parameters. The cluster analysis led to the grouping of VLC classes based on similarity, into three distinct subclusters (Coph.corr.=0.785). Cluster C1 included the first two subclusters, C1-A ((VLC2,VLC3), VLC1) and C1-B ((VLC4,VLC5), (VLC6,VLC7)). Cluster C2 included the classes (VLC8, VLC9). A high level of similarity was recorded between classes VLC6 and VLC7, SDI=47.46. Mathematical models described the variation of parameter values in relation to the classes position for the vineyard area.*

Keywords*: natural resources, PCA, remote sensing, spatial data, vineyard area*

INTRODUCTION

The wine-growing areas present certain specific characteristics of the morphology of the territory, of the climatic profile, of the soil properties, which ensure highly favorable conditions for the vine (Townsend, 2011; Salata et al., 2022).

The land topography, the soil and the climate are important elements for the vine, for the yield and for the quality of the wine products (Fraga et al., 2014).

An important role in the characteristics of the land, suitable for the vine, is the exposure of the land, the southern, southeastern and southwestern exposure ensuring adequate solar radiation conditions for the vine (Uyan et al., 2023).

The slope of the land is of particular importance for vineyard plantations, for plantation management, technical and technological works, and influences the manifestation of other factors and soil quality (Roy et al., 2018; Cossart et al., 2020).

The altitude is important for vineyard plantations, for the manifestation of other climatic and soil factors, for the physiology of the vine, yield and quality of wine production (Arias et al., 2022; Mansour et al., 2022).

Soil is also important in relation to the requirements of the vine, and contributes essentially to the quality of the grapes, down to the specific characteristic of "terroir" (White, 2020; Bonfante and Brillante, 2022).

Climatic conditions are of vital importance for wine-growing areas, for vines, yield and quality of wine production (Prada et al., 2024).

Techniques based on remote sensing and GIS provide useful information for land analysis and characterization of wine-growing areas and plantation management (De Petris et al., 2024; Towers et al., 2024).

The present study used techniques based on remote sensing and mathematical analysis to characterize a vineyard area based on the ASPECT, SLOPE and DEM parameters.

MATERIAL AND METHODS

The study analyzed the Recas wine-growing area, Romania (Figure 1), based on representative parameters of the terrain morphology. The study area is located in the Western Plain of Romania.

To characterize the vineyard area, ASPECT, SLOPE and DEM parameters were determined. The determination of the parameters and the generation of maps for the study location were done in ArcGIS (ESRI, 2011).

Nine classes of the studied vineyard area (VLC1 to VLC9) were generated, based on the determined parameter values. The statistical reliability of the data was evaluated based on the Anova Test.

Multivariate analysis was used to evaluate the positioning of the parameters in relation to the principal components (PC1, PC2).

Figure 1. Study location, Recas wine-growing area, Recas ATU, Romania

The intensity of action of the parameters (as factors) was quantified based on the correlation coefficient. Through PCA analysis, the correlation of the vineyard area classes with morphological parameters of the land was evaluated.

The level of variance was explained based on the principal components. Cluster analysis was used to generate a cluster dendrogram for grouping classes based on similarity. The level of class similarity was assessed based on similarity and distance indices (SDI).

Ranking analysis was used to generate a value hierarchy of the classes. In relation to the objectives of the study, the experimental data were analyzed with the PAST software (Hammer et al., 2001), Wolfram Alpha (2020), and JASP (2022).

RESULTS AND DISCUSSIONS

The Recas vineyard area, Romania, was analyzed using remote sensing. ASPECT, SLOPE and DEM parameters were determined to evaluate the territorial area. 9 classes were generated (VLC1 to VLC9), and the parameter values, for the determined classes, are presented in Table 1. According to the Anova Test, the results showed statistical reliability (F > Fcrit), p = 0.030, Alpha = 0.05).

Table 1. Parameter values on generated classes

Viticultural Land Class	Area acording to parameters		
	ASPECT	SLOPE	DEM
		(ha)	
VLC1	18.89	174.86	84.06
VLC2	34.91	232.29	166.28
VLC3	122.57	238.31	179.95
VLC4	250.22	200.06	173.28
VLC5	255.80	143.96	176.26
VLC6	207.91	95.65	191.52
VLC7	189.09	70.26	156.11
VLC8	113.15	38.49	86.09
VLC9	20.59	13.19	51.67
TOTAL	1213.13	1207.07	1265.22

DEM, SLOPE and ASPECT parameters are among the most important elements, in many spatial databases, for the analysis and characterization of natural resources.

The distribution of classes in concurrent relation with the three land characterization parameters in the vineyard area is presented in figure 2. With high values, according to the legend, classes VLC4, VLC5, VLC6, VLC7 and VLC8 are grouped, which show high favorability for the studied vineyard area.

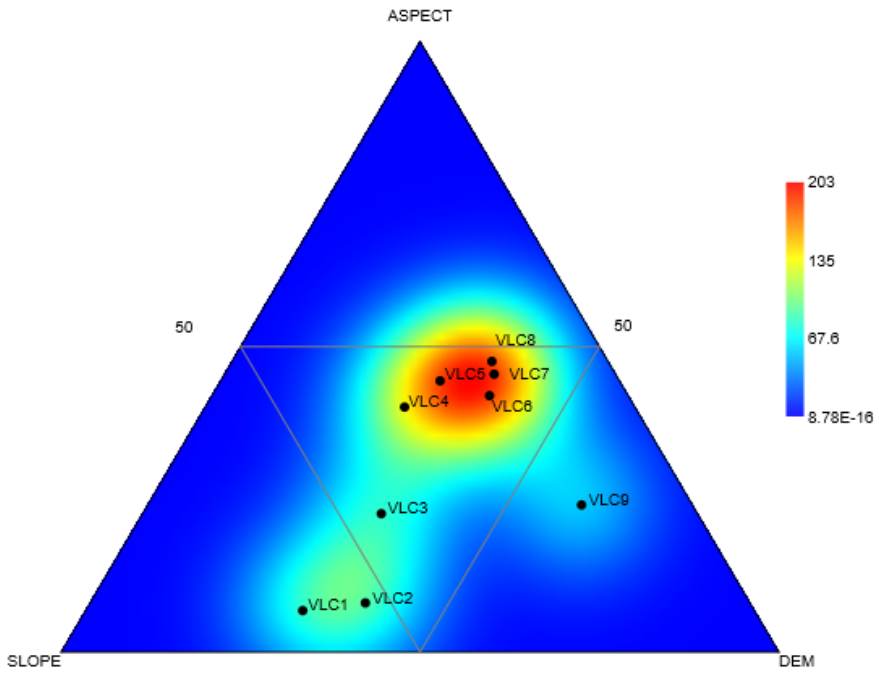

Figure 2. Positioning of classes in relation to land characterization indicators

Multivariate analysis generated the distribution of classes according to correlation level for SLOPE, DEM and ASPECT, figure 3. The two main components explained 95.983% of total variance. Class VLC4 was positioned strongly correlated with DEM.

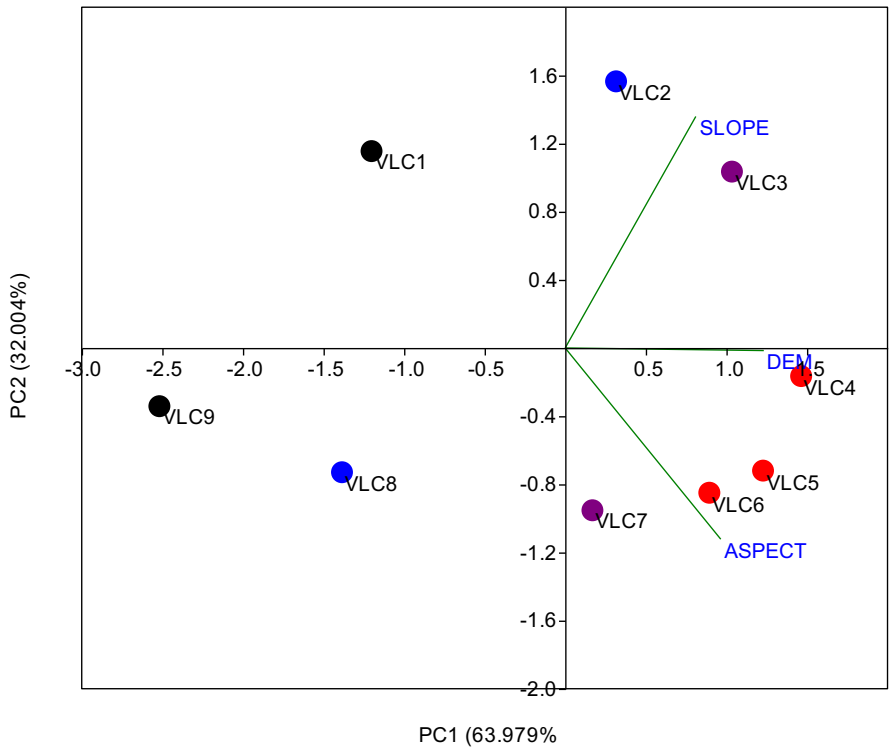

Figure 3. PCA diagram with class distribution in relation to evaluated parameters

The factor loadings in relation to the principal components were analyzed. The DEM parameter showed positive action, with very strong intensity, at the level of r = 0.969. The ASPECT parameter showed positive

action, with moderate intensity, r = 0.758. The SLOPE parameter showed positive action, with weak intensity, at the level of r = 0.594.

The cluster analysis led to the dendrogram in figure 4 (Coph.corr. = 0.785). The terrain classes were associated, based on similarity, in three distinct subclusters. The classes with high favorability occupied a central position within the dendrogram, in the C1-B subcluster [(VLC4,VLC5), (VLC6,VLC7)]. On the lateral areas of the dendrogram, the other classes were positioned, respectively (VLC8, VLC9) in the C2 subcluster, and ((VLC2,VLC3), VLC1) in the C1-A subcluster.

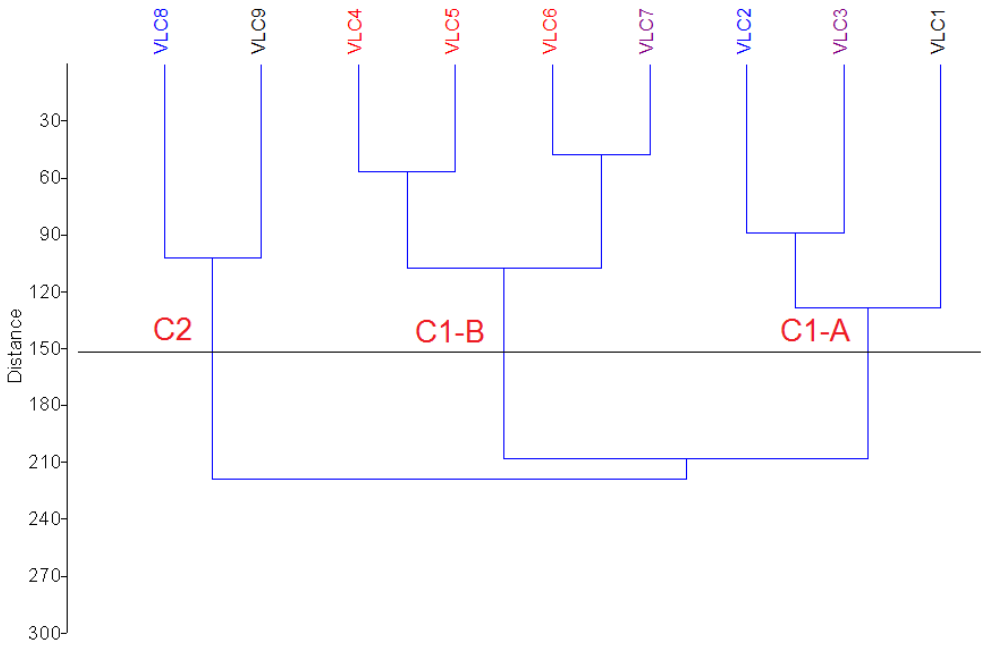

Figure 4. Cluster dendrogram of land classes in the studied vineyard area

The similarity level values are presented in Table 2. The highest similarity level was recorded between VLC 6 and VLC7 classes, respectively SDI = 47.46 (Table 2).

Table 2. SDI values for land classes in the studied vineyard area

	VLC1	VLC2	VLC3	VLC4	VLC5	VLC6	VLC7	VLC8	VLC9
VLC1		101.56	154.82	249.22	256.09	231.41	212.37	165.79	164.89
VLC2	101.56		88.92	217.82	238.11	221.89	223.89	223.85	247.68
VLC3	154.82	88.92		133.42	163.30	166.64	182.30	220.97	278.45
VLC4	249.22	217.82	133.42		56.46	114.12	144.50	229.12	320.06
VLC5	256.09	238.11	163.30	56.46		69.72	101.43	199.01	296.56
VLC6	231.41	221.89	166.64	114.12	69.72		47.46	152.85	247.88
VLC7	212.37	223.89	182.30	144.50	101.43	47.46		108.07	206.29
VLC8	165.79	223.85	220.97	229.12	199.01	152.85	108.07		101.94
VLC9	164.89	247.68	278.45	320.06	296.56	247.88	206.29	101.94	

The ranking analysis led to the diagram in figure 5 (a), which shows the hierarchy of classes based on the simultaneous values of the three parameters (SLOPE, ASPECT, DEM), with the classes in the confidence interval in relation to the parameter with the most pronounced influence in principal components (DEM, r = 0.969), figure 5 (b).

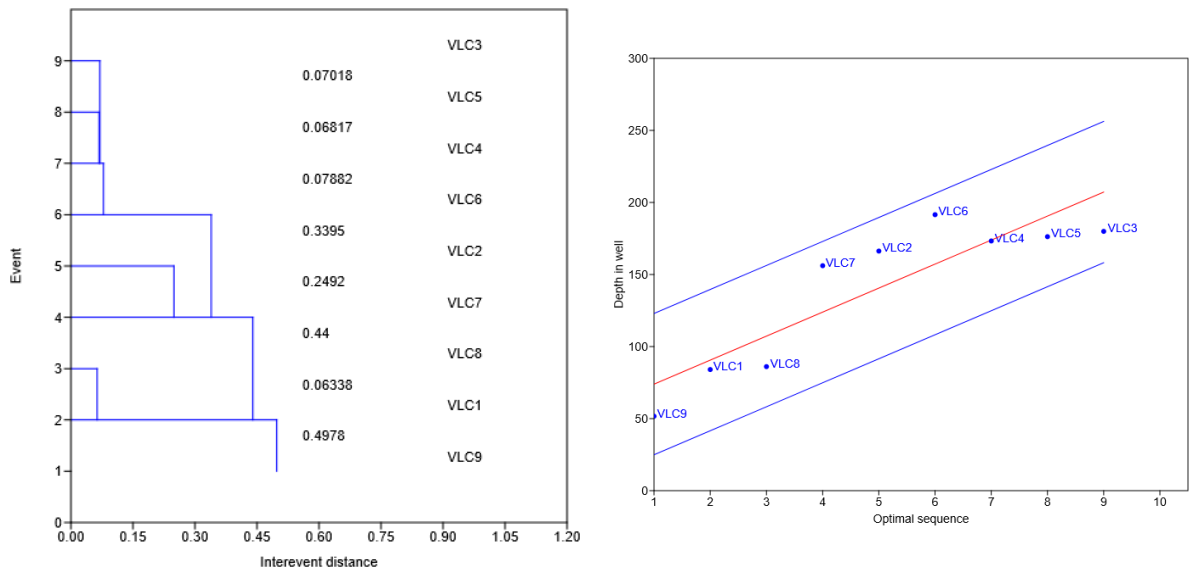

(a) (b)

Figure 5. Ranking diagram of classes in the characterization of the vineyard area

Parameters variation, in relation to the classses position was described by equation (1), with R^2 = 0.955 (in the case of ASPECT), by equation (2), with R^2 = 0.985 (in the case of SLOPE), and by equation (3), with R^2 = 0.925 (in the case of DEM).

$$\text{ASPECT} = 0.7992x^4 - 16.832x^3 + 105.13x^2 - 172.91x + 95.994 \quad (1)$$

$$\text{SLOPE} = 1.8666x^3 - 31.478x^2 + 124.94x + 86.201 \quad (2)$$

$$\text{DEM} = -0.1866x^4 + 3.945x^3 - 35.535x^2 + 143.58x - 21.829 \quad (3)$$

where:
x – class position in order VLC1 to VLC9

The ASPECT parameter is important for wine-growing areas in relation to sunlight reception, duration of insolation, yield and quality of grape production. The variation of the ASPECT parameter in relation to SLOPE and DEM, as a direct and interaction effect, was described by equation (4), under conditions of R2 = 0.927. The variation model of the ASPECT parameter in relation to SLOPE and DEM is presented in figure 6, in 3D format, figure 6 (a) and in isoquants format, figure 6 (b).

$$\text{ASPECT} = \text{a}\,x^2 + \text{b}\,y^2 + \text{c}\,x + \text{d}\,y + \text{e}\,xy + \text{f} \quad (4)$$

where:
x – SLOPE;
y – DEM;
a, b, c, d, e, f – parameter of equation (4);
a = -0.02358965;
b = -0.01575941;
c = 1.97905809;
d = 1.97731814;
e = 0.02790364;
f = -76.29768725

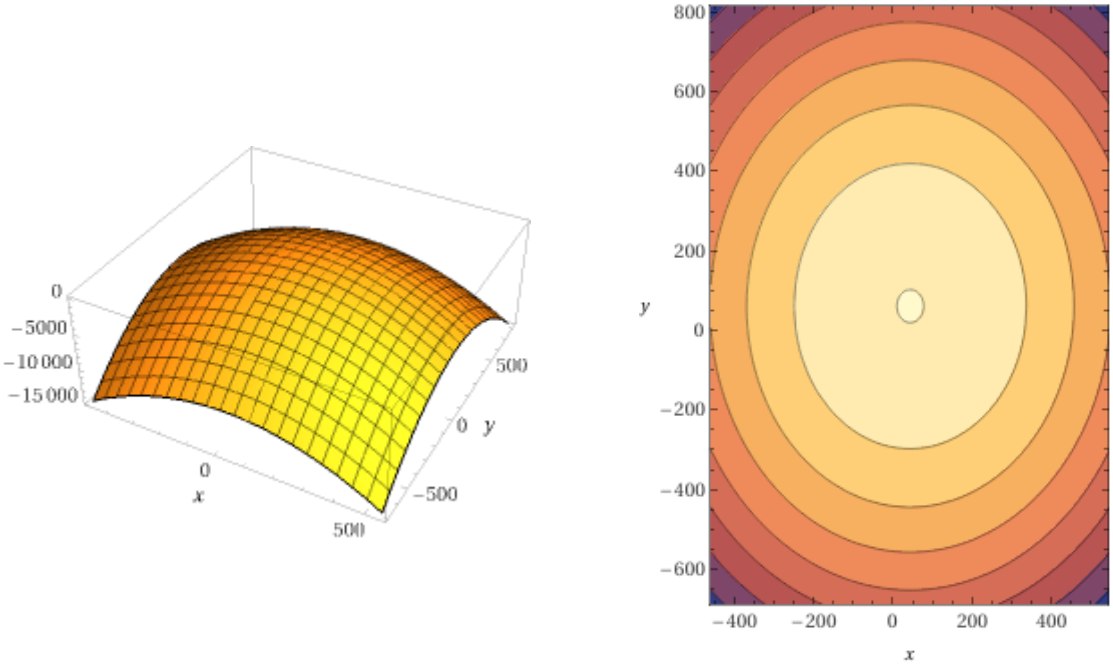

(a) (b)

Figure 6. ASPECT variation in relation to SLOEP (x – axis), and DEM (y – axes)

ASPECT, SLOPE, and DEM parameters expressed the specificity of the Recas vineyard area, considered in the study. Due to its geographical position and geomorphological conditions, the analyzed vineyard area was quantified with favorable values for the determined parameters.

Regarding ASPECT, the classes VLC4, VLC5, and VLC6 (S-E, S, S-V), total 58.85% of the surface. To these can be added the class VLC3 (E) with 10.10%, respectively VLC7 (V) with 15.59% of the surface. These classes were positioned grouped in the triangular representation of the classes (figure 2), along with the three parameters analyzed simultaneously.

Multivariate analysis included classes VLC3, VLC4, VLC5 and VLC6 closely correlated with ASPECT, SLOPE and DEM parameters (Figure 3). Cluster analysis grouped classes VLC4, VLC5, VLC6 and VLC7 based on similarity (Figure 4).

The importance of land morphological parameters, soil quality and fertility for wine-growing areas, and vine physiology, have been studied and confirmed by other research in the field (Townsend, 2011; Sala and Blidariu, 2012; Cossart et al., 2020; Uyan et al., 2023). In relation to the specifics of the biological material, the vineyard plantation system, and the land morphological particularities viticultural practices are adapted to ensure yields, grape quality, and sustainable viticulture (Dobrei et al., 2015a,b; Zambon et al., 2018; Prada et al., 2024; O'Brien et al., 2025).

Polynomial mathematical models described the variation of the ASPECT, SLOPE and DEM parameters in relation to the identified classes, under conditions of statistical safety (R^2 = 0.955 in the case of ASPECT, R^2 = 0.985 in the case of SLOPE, R^2 = 0.925 in the case of DEM). The variation of ASPECT in relation to SLOPE and DEM was described mathematically under conditions of R^2 = 0.927. Metode, modele si algoritmi matematici au fost folositi in studii de clasificare a arealelor terestre, pentru caracterizarea unor cereale graminee, pentru estimarea continutului de pigmenti fotosintetici sau a randamentelor (Herbei et al., 2015; Constantinescu et al., 2018; Andrade et al., 2023).

Different models have been reported in studies of wine-growing areas, regarding land use transitions, compatibility of vine cultivation in relation to land morphology, or yield estimation in relation to influencing factors (Cossart et al., 2020; Uyan et al., 2023; Towers et al., 2024).

The hierarchy of classes based on parameter values resulted in the classes falling within the confidence interval.

CONCLUSIONS

ASPECT, SLOPE and DEM parameters described the specificity of the terrain morphology within the Recas vineyard area, considered in this study.

ASPECT showed that 58.85% of the studied area has very favorable exposure for vines (S, SE, and SW), and 25.69% of the wine-growing area has eastern and western exposure, with favorable conditions. A share of

12.20% of the area has NE and NW exposure, and a share of 3.25% has northern exposure.

Based on the SLOPE parameter, it was assessed that the entire area is adequate for modern technologies, appropriate for the vine. The DEM parameter showed a variation of the terrain between 140 m and 220 m altitude, with high favorability for the vine. Based on the values recorded by the analyzed parameters, nine classes of the vineyard area resulted, with specific values in each class.

The simultaneous approach of the ASPECT, SLOPE and DEM parameters, in a triangular representation, showed that five classes, with high favorability, were positioned in association, according to the graphic legend.

The results present scientific and practical importance for the characterization of vineyard areas, for the generation of information in the form of data, mathematical models and graphics useful for management decisions and the optimization of vineyard operations.

ACKNOWLEDGMENTS

The authors thank the GEOMATICS Research Laboratory, ULS "King Mihai I" from Timisoara, for the facility of the software used for this study.

REFERENCES

1. Andrade C.B., Moura-Bueno J.M., Comin J.J., Brunetto G. Grape yield prediction models: Approaching different machine learning algorithms. Horticulturae, 2023, 9(12), 1294. https://doi.org/10.3390/horticulturae9121294
2. Arias L.A., Berli F., Fontana A., Bottini R., Piccoli P. Climate change effects on grapevine physiology and biochemistry: Benefits and challenges of high altitude as an adaptation strategy. Frontiers in Plant Science, 2022, 13, 835425. doi: 10.3389/fpls.2022.835425
3. Bonfante A., Brillante L. Terroir analysis and its complexity. OENO One, 2022, 56(2), 375–388. https://doi.org/10.20870/oeno-one.2022.56.2.5448
4. Constantinescu C., Herbei M., Rujescu C., Sala F. Model prediction of chlorophyll and fresh biomass in cereal grasses based on aerial images. AIP Conference Proceedings, 2018, 1978, 390003. https://doi.org/10.1063/1.5043987
5. Cossart E., Pic J., Le Guen Y., Fressard M. Spatial patterns of vineyard abandonment and related land use transitions in beaujolais (France): A multiscale approach. Sustainability, 2020, 12(11), 4695. https://doi.org/10.3390/su12114695
6. De Petris S., Sarvia F., Parizia F., Ghilardi F., Farbo A., Borgogno-Mondino E. Assessing mixed-pixels effects in vineyard mapping from Satellite: A proposal for an operational solution. Computers and Electronics in Agriculture, 2024, 222, 109092. https://doi.org/10.1016/j.compag.2024.109092
7. Dobrei A., Nistor, E., Sala, F., Dobrei, A. Tillage practices in the context of climate change and a sustainable viticulture. Notulae Scientia Biologicae, 2015, 7(4), 500-504. https://doi.org/10.15835/nsb749724
8. Dobrei A., Dobrei A.G., Nistor E., Iordanescu O.A., Sala F. Local grapevine germplasm from Western of Romania-An alternative to climate change and source of typicity and authenticity. Agriculture and Agricultural Science Procedia, 2015, 6, 124-131. https://doi.org/10.1016/j.aaspro.2015.08.048
9. ESRI 2011. ArcGIS Desktop: Release 10. Redlands, CA: Environmental Systems Research Institute.
10. Fraga H., Malheiro A.C., Moutinho-Pereira J., Cardoso R.M., Soares P.M.M., Cancela J.J., Pinto J.G., Santos J.A. Integrated analysis of climate, soil, topography and vegetative growth in Iberian viticultural regions. PLoS ONE, 2014, 9(9), e108078. https://doi.org/10.1371/journal.pone.0108078
11. Hammer Ø., Harper D.A.T., Ryan P.D. PAST: Paleontological Statistics software package for education and data analysis. Palaeontologia Electronica, 2001, 4(1), 1-9.
12. Herbei M.V., Sala F., Boldea M. Using mathematical algorithms for classification of LANDSAT 8 satellite images. AIP Conference Proceedings, 2015, 1648, 670004-1 - 670004-4. https://doi.org/10.1063/1.4912899
13. JASP Team (2022). JASP (Version 0.16.2) [Computer software].
14. Mansour G., Ghanem C., Mercenaro L., Nassif N., Hassoun G., Caro A.D. Effects of altitude on the chemical composition of grapes and wine: A review. OENO One, 2022, 56(1). https://doi.org/10.20870/oeno-one.2022.56.1.4895
15. O'Brien, F., Nesbitt, A., Sykes, R., & Kemp, B. (2025). Regenerative viticulture and climate change resilience. OENO One, 59(1). https://doi.org/10.20870/oeno-one.2025.59.1.8089
16. Prada J., Dinis LT., Soriato E., Vandelle E., Soletkin O., Uysal Ş., Dihazi A., Santos C., Santos J.A. Climate change impact on Mediterranean viticultural regions and site-specific climate risk-reduction strategies. Mitigation and Adaptation Strategies for Global Change, 2024, 29, 52. https://doi.org/10.1007/s11027-024-10146-0
17. Roy H.G., Fox D.M., Emsellem K. Impacts of vineyard area dynamics on soil erosion in a Mediterranean catchment (1950-2011). Journal of Land Use Science, 2018, 13(1-2), 118-129. https://doi.org/10.1080/1747423X.2017.1385654
18. Sala F., Blidariu C. Macro-and Micronutrient Content in Grapevine Cordons under the Influence of Organic and

Mineral Fertilization. Bulletin of University of Agricultural Sciences and Veterinary Medicine Cluj-Napoca. Horticulture, 2012, 69(1), 317-324.
19. Salata S., Ozkavaf-Senalp S., Velibeyoğlu K., Elburz Z. 2022. Land suitability analysis for vineyard cultivation in the Izmir Metropolitan Area. Land, 2022, 11(3), 416. https://doi.org/10.3390/land11030416
20. Towers P.C., Roulet S.E., Poblete-Echeverría C. Vine yield estimation from block to regional scale employing remote sensing, weather, and management data. Information Processing in Agriculture, 2024. https://doi.org/10.1016/j.inpa.2024.06.001
21. Townsend C.G. Viticulture and the role of geomorphology: General principles and case studies. Geography Compass, 2011, 5(10), 750-766. https://doi.org/10.1111/j.1749-8198.2011.00449.x
22. Uyan M., Janus J., Ertunç E. Land use suitability model for grapevine (*Vitis vinifera* L.) cultivation using the best worst method: A case study from Ankara/Türkiye. Agriculture, 2023, 13(9), 1722. https://doi.org/10.3390/agriculture13091722
23. White R.E. The value of soil knowledge in understanding wine terroir. Frontiers in Environtal Science, 2020, 8, 12. doi: 10.3389/fenvs.2020.00012
24. Wolfram, Research, Inc., Mathematica, Version 12.1, Champaign, IL (2020).
25. Zambon I., Colantoni A., Cecchini M., Mosconi E.M. Rethinking Sustainability within the Viticulture Realities Integrating Economy, Landscape and Energy. Sustainability 2018, 10(2), 320. https://doi.org/10.3390/su10020320